# TUFIT SAE SPLIT FLANGES HALVES (ISO 6162)

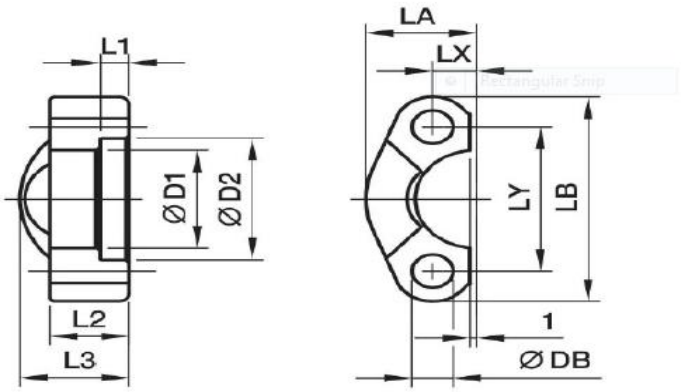

| 3000 PSI Standard Pressure Series (According to ISO 6162-1) | | | | | | | | | | | | | | | |
|---|---|---|---|---|---|---|---|---|---|---|---|---|---|---|---|
| SAE (IN) | (DN) | D1 | D2 | L1 | L2 | L3 | LA | LB | LX | LY | Ø DB | BOLT | WEIG HT | PN (bar) | TUFIT PART NO. |
| ½" | 13 | 24.26 | 30.96 | 6.22 | 13 | 19 | 22.8 | 54 | 8.74 | 38.1 | 8.5 | M8X25 | 0.08 | 345 | SFH012 |
| ¾" | 19 | 32.13 | 38.89 | 6.22 | 14 | 22 | 25.9 | 65 | 11.13 | 47.63 | 10.5 | M10X30 | 0.09 | 345 | SFH034 |
| 1" | 25 | 38.48 | 45.24 | 7.49 | 16 | 24 | 29.2 | 70 | 13.08 | 52.37 | 10.5 | M10X30 | 0.11 | 345 | SFH001 |
| 1¼" | 32 | 43.69 | 51.59 | 7.49 | 16 | 22 | 36.3 | 79 | 15.08 | 58.72 | 12 | M10X30 | 0.15 | 276 | SFH114 |
| 1½" | 38 | 50.8 | 61.09 | 7.49 | 16 | 25 | 41.1 | 94 | 17.86 | 69.85 | 13.5 | M12X35 | 0.23 | 207 | SFH112 |
| 2" | 51 | 62.74 | 72.24 | 9.02 | 16 | 26 | 48.2 | 102 | 21.44 | 77.77 | 13.5 | M12X35 | 0.25 | 207 | SFH002 |
| 2½" | 64 | 74.93 | 84.94 | 9.02 | 19 | 38 | 54.1 | 114 | 25.4 | 88.9 | 13.5 | M12X40 | 0.37 | 172 | SFH212 |
| 3" | 76 | 90.93 | 102.39 | 9.02 | 22 | 41 | 65.3 | 135 | 30.96 | 106.38 | 17 | M16X50 | 0.65 | 138 | SFH003 |
| 3½" | 89 | 102.4 | 115.1 | 10.72 | 22 | 28 | 68.6 | 152 | 34.95 | 120.7 | 17 | M16X50 | 0.75 | 34 | SFH312 |
| 4" | 102 | 115.06 | 127.79 | 10.72 | 25 | 35 | 76 | 162 | 38.88 | 130.18 | 17 | M16X50 | 0.83 | 34 | SFH004 |
| 5" | 127 | 140.5 | 153.2 | 10.72 | 28 | 41 | 90 | 184 | 46 | 152.4 | 17 | M16X50 | 1.25 | 34 | SFH005 |
| 6000 PSI High Pressure Series (According to ISO 6162-2) | | | | | | | | | | | | | | | |
| ½" | 13 | 24.64 | 32.54 | 7.24 | 16 | 22 | 23.6 | 56 | 9.12 | 40.49 | 8.5 | M8X30 | 0.08 | 420 | SFH012-6 |
| ¾" | 19 | 32.51 | 42.06 | 8.26 | 19 | 28 | 30 | 71 | 11.91 | 50.8 | 10.5 | M10X35 | 0.175 | 420 | SFH034-6 |
| 1" | 25 | 38.86 | 48.41 | 9.02 | 24 | 33 | 34.8 | 81 | 13.89 | 57.17 | 12.5 | M12X45 | 0.265 | 420 | SFH001-6 |
| 1¼" | 32 | 44.45 | 54.76 | 9.78 | 27 | 38 | 38.6 | 95 | 15.88 | 66.68 | 14.5 | M14X45 | 0.405 | 420 | SFH114-6 |
| 1½" | 38 | 51.56 | 64.29 | 12.07 | 30 | 43 | 47.5 | 113 | 18.26 | 79.38 | 16.8 | M16X55 | 0.675 | 420 | SFH112-6 |
| 2" | 51 | 67.56 | 80.16 | 12.07 | 37 | 52 | 56.9 | 133 | 22.23 | 96.82 | 21 | M20X55 | 1.05 | 420 | SFH002-6 |
| 2½" | 64 | 90 | 108.9 | 20.5 | 45 | 45 | 75.1 | 180 | 29.4 | 123.8 | 26 | M24X75 | 2.05 | 420 | SFH212-6 |
| 3" | 76 | 115 | 132.5 | 25.5 | 55 | 55 | 99.1 | 215 | 35.7 | 152.4 | 31 | M30X90 | 4.3 | 420 | SFH003-6 |

| Material | Surface Protection | Tufit Part No. Example |
|---|---|---|
| Carbon Steel | Trivalent Cr(VI) - free Zinc Plated Bright Passivated | SFH012 |
| AISI-304 | Natural Finish | SFH012S4 |
| AISI-316 | Natural Finish | SFH012S6 |

# TUFIT SAE MONO FLANGES (ISO 6162)

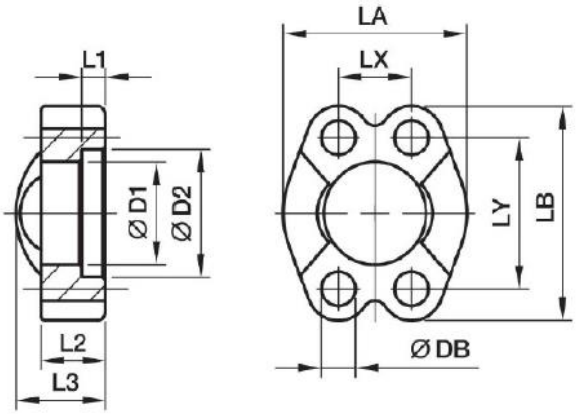

| 3000 PSI Standard Pressure Series (According to ISO 6162-1) | | | | | | | | | | | | | | | |
|---|---|---|---|---|---|---|---|---|---|---|---|---|---|---|---|
| SAE (IN) | (DN) | D1 | D2 | L1 | L2 | L3 | LA | LB | LX | LY | ØDB | BOLT | WEIGHT | PN (bar) | TUFIT PART NO. |
| ½" | 13 | 24.26 | 30.96 | 6.22 | 13 | 19 | 45.6 | 54 | 17.48 | 38.1 | 8.50 | M8X25 | 0.15 | 345 | MF012 |
| ¾" | 19 | 32.13 | 38.89 | 6.22 | 14 | 22 | 51.8 | 65 | 22.23 | 47.63 | 10.50 | M10X30 | 0.17 | 345 | MF034 |
| 1" | 25 | 38.48 | 45.24 | 7.49 | 16 | 24 | 58.4 | 70 | 26.19 | 52.37 | 10.50 | M10X30 | 0.22 | 345 | MF001 |
| 1¼" | 32 | 43.69 | 51.59 | 7.49 | 16 | 22 | 72.6 | 79 | 30.18 | 58.72 | 10.50 | M10X30 | 0.3 | 276 | MF114 |
| 1½" | 38 | 50.8 | 61.09 | 7.49 | 16 | 25 | 82.2 | 94 | 35.71 | 69.85 | 12.00 | M12X35 | 0.45 | 207 | MF112 |
| 2" | 51 | 62.74 | 72.24 | 9.02 | 16 | 26 | 96.4 | 102 | 42.88 | 77.77 | 13.50 | M12X35 | 0.5 | 207 | MF002 |
| 2½" | 64 | 74.93 | 84.94 | 9.02 | 19 | 38 | 108.2 | 114 | 50.8 | 88.9 | 13.50 | M12X40 | 0.74 | 172 | MF212 |
| 3" | 76 | 90.93 | 102.39 | 9.02 | 22 | 41 | 130.6 | 135 | 61.93 | 106.38 | 17.00 | M16X50 | 1.3 | 138 | MF003 |
| 3½" | 89 | 102.4 | 115.1 | 10.72 | 22 | 28 | 140 | 152 | 69.9 | 120.7 | 17.00 | M16X50 | 1.5 | 34 | MF312 |
| 4" | 102 | 115.06 | 127.79 | 10.72 | 25 | 35 | 152 | 162 | 77.77 | 130.18 | 17.00 | M16X50 | 1.65 | 34 | MF004 |
| 5" | 127 | 140.46 | 153.2 | 10.72 | 28 | 41 | 180 | 184 | 92.08 | 152.4 | 17.00 | M16X50 | 2.5 | 34 | MF005 |
| | 6000 PSI High Pressure Series (According to ISO 6162-2) | | | | | | | | | | | | | | |
| ½" | 13 | 24.64 | 32.54 | 7.24 | 16 | 22 | 47.2 | 56 | 18.24 | 40.49 | 8.5 | M8X30 | 0.16 | 420 | MF012-6 |
| ¾" | 19 | 32.51 | 42.06 | 8.26 | 19 | 28 | 60 | 71 | 23.8 | 50.8 | 10.5 | M10X35 | 0.35 | 420 | MF034-6 |
| 1" | 25 | 38.86 | 48.41 | 9.02 | 24 | 33 | 69.9 | 81 | 27.76 | 57.15 | 12.5 | M12X45 | 0.53 | 420 | MF001-6 |
| 1¼" | 32 | 44.45 | 54.76 | 9.78 | 27 | 38 | 77.2 | 95 | 31.75 | 66.68 | 14.5 | M14X45 | 0.8 | 420 | MF114-6 |
| 1½" | 38 | 51.56 | 64.29 | 12.07 | 30 | 43 | 95 | 113 | 36.5 | 79.38 | 16.8 | M16X55 | 1.35 | 420 | MF112-6 |
| 2" | 51 | 67.56 | 80.16 | 12.07 | 37 | 52 | 113.8 | 133 | 44.45 | 96.82 | 21 | M20X55 | 2.1 | 420 | MF002-6 |
| 2½" | 64 | 90 | 108.9 | 20.5 | 45 | 45 | 150.2 | 180 | 58.8 | 123.8 | 26 | M24X75 | 4.1 | 420 | MF212-6 |
| 3" | 76 | 115 | 132.5 | 25.5 | 55 | 55 | 198.16 | 215 | 71.6 | 152.4 | 31 | M30X90 | 8.6 | 420 | MF003-6 |

| Material | Surface Protection | Tufit Part No. Example |
|---|---|---|
| Carbon Steel | Trivalent Cr(VI) - free Zinc Plated Bright Passivated | MF012 |
| AISI-304 | Natural Finish | MF012S4 |
| AISI-316 | Natural Finish | MF012S6 |

# TUFIT SAE MONO METRIC TAPPED FLANGES (ISO 6162)

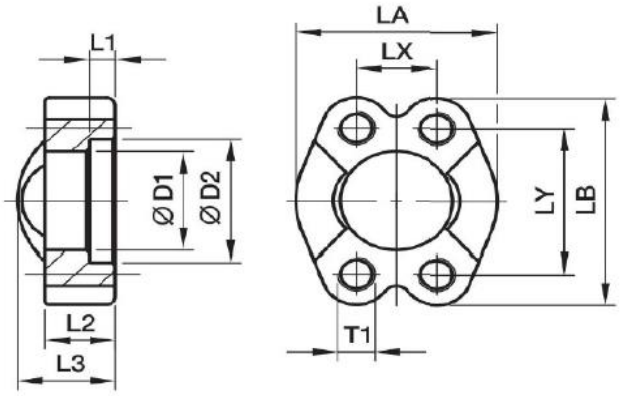

| 3000 PSI Standard Pressure Series (According to ISO 6162-1) | | | | | | | | | | | | | | | |
|---|---|---|---|---|---|---|---|---|---|---|---|---|---|---|---|
| SAE (IN) | (DN) | D1 | D2 | L1 | L2 | L3 | LA | LB | LX | LY | DB | T1 BOLT | WEIGHT | PN (bar) | TUFIT PART NO. |
| ½" | 13 | 24.26 | 30.96 | 6.22 | 13.00 | 19.00 | 45.60 | 54.00 | 17.48 | 38.1 | M8 | M8X25 | 0.15 | 345 | MMF012 |
| ¾" | 19 | 32.13 | 38.89 | 6.22 | 14.00 | 22.00 | 51.80 | 65.00 | 22.23 | 47.63 | M10 | M10X30 | 0.17 | 345 | MMF034 |
| 1" | 25 | 38.48 | 45.24 | 7.49 | 16.00 | 24.00 | 58.40 | 70.00 | 26.19 | 52.37 | M10 | M10X30 | 0.22 | 345 | MMF001 |
| 1¼" | 32 | 43.69 | 51.59 | 7.49 | 16.00 | 22.00 | 72.60 | 79.00 | 30.18 | 58.72 | M10 | M10X30 | 0.3 | 276 | MMF114 |
| 1½" | 38 | 50.80 | 61.09 | 7.49 | 16.00 | 25.00 | 82.20 | 94.00 | 35.71 | 69.85 | M12 | M12X35 | 0.45 | 207 | MMF112 |
| 2" | 51 | 62.74 | 72.24 | 9.02 | 16.00 | 26.00 | 96.40 | 102.00 | 42.88 | 77.77 | M12 | M12X35 | 0.5 | 207 | MMF002 |
| 2½" | 64 | 74.93 | 84.94 | 9.02 | 19.00 | 38.00 | 108.20 | 114.00 | 50.8 | 88.9 | M12 | M12X40 | 0.74 | 172 | MMF212 |
| 3" | 76 | 90.93 | 102.39 | 9.02 | 22.00 | 41.00 | 130.60 | 135.00 | 61.93 | 106.38 | M16 | M16X50 | 1.3 | 138 | MMF003 |
| 3½" | 89 | 102.40 | 115.10 | 10.72 | 22.00 | 28.00 | 140.00 | 152.00 | 69.9 | 120.7 | M16 | M16X50 | 1.5 | 34 | MMF312 |
| 4" | 102 | 115.06 | 127.79 | 10.72 | 25.00 | 35.00 | 152.00 | 162.00 | 77.77 | 130.18 | M16 | M16X50 | 1.65 | 34 | MMF004 |
| 5" | 127 | 140.46 | 153.20 | 10.72 | 28.00 | 41.00 | 180.00 | 184.00 | 92.08 | 152.4 | M16 | M16X50 | 2.5 | 34 | MMF005 |
| 6000 PSI High Pressure Series (According to ISO 6162-2) | | | | | | | | | | | | | | | |
| ½" | 13 | 24.64 | 32.54 | 7.24 | 16 | 22 | 47.2 | 56 | 18.24 | 40.49 | M8 | M8X30 | 0.16 | 420 | MMF012-6 |
| ¾" | 19 | 32.51 | 42.06 | 8.26 | 19 | 28 | 60 | 71 | 23.8 | 50.8 | M10 | M10X35 | 0.35 | 420 | MMF034-6 |
| 1" | 25 | 38.86 | 48.41 | 9.02 | 24 | 33 | 69.9 | 81 | 27.76 | 57.15 | M12 | M12X45 | 0.53 | 420 | MMF001-6 |
| 1¼" | 32 | 44.45 | 54.76 | 9.78 | 27 | 38 | 77.2 | 95 | 31.75 | 66.68 | M14 | M14X45 | 0.8 | 420 | MMF114-6 |
| 1½" | 38 | 51.56 | 64.29 | 12.07 | 30 | 43 | 95 | 113 | 36.5 | 79.38 | M16 | M16X55 | 1.35 | 420 | MMF112-6 |
| 2" | 51 | 67.56 | 80.16 | 12.07 | 37 | 52 | 113.8 | 133 | 44.45 | 96.82 | M20 | M20X55 | 2.1 | 420 | MMF002-6 |
| 2½" | 64 | 90 | 108.9 | 20.5 | 45 | 45 | 150.2 | 180 | 58.8 | 123.8 | M24 | M24X75 | 4.1 | 420 | MMF212-6 |
| 3" | 76 | 115 | 132.5 | 25.5 | 55 | 55 | 198.16 | 215 | 71.6 | 152.4 | M30 | M30X90 | 8.6 | 420 | MMF003-6 |

| Material | Surface Protection | Tufit Part No. Example |
|---|---|---|
| Carbon Steel | Trivalent Cr(VI) - free Zinc Plated Bright Passivated | MMF012 |
| AISI-304 | Natural Finish | MMF012S4 |
| AISI-316 | Natural Finish | MMF012S6 |

# TUFIT INTEGRATED FBSP WITH O RING (ISO 6162)

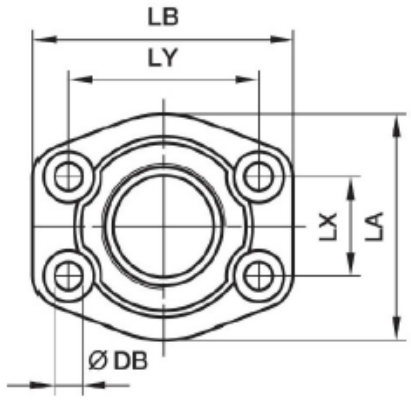


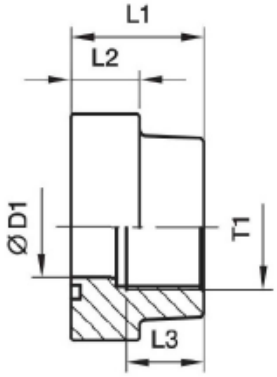

| 3000 PSI Standard Pressure Series (According to ISO 6162-1) | | | | | | | | | | | | | | | |
|---|---|---|---|---|---|---|---|---|---|---|---|---|---|---|---|
| SAE (IN) | ISO (DN) | T1 | D1 | L1 | L2 | L3 | LA | LB | LX | LY | Ø DB | BOLT | WEIGHT | PN (bar) | TUFIT PART NO. |
| ½" | 13 | ½" | 13 | 36 | 16 | 18 | 47 | 57 | 17.5 | 38.1 | 8.7 | M8X30 | 0.25 | 345 | IFG012 |
| ¾" | 19 | ¾" | 19 | 36 | 18 | 18 | 50 | 67 | 22.3 | 47.6 | 10.5 | M10X35 | 0.37 | 345 | IFG034 |
| 1" | 25 | 1" | 25 | 38 | 18 | 18 | 54 | 72 | 26.2 | 52.4 | 10.5 | M10X35 | 0.45 | 345 | IFG001 |
| 1¼" | 32 | 1¼" | 31 | 41 | 21 | 20 | 68 | 82 | 30.2 | 58.7 | 10.6 | M10X40 | 0.66 | 276 | IFG114 |
| 1½" | 38 | 1½" | 38 | 44 | 25 | 22 | 79 | 96 | 35.7 | 69.9 | 13.5 | M12X45 | 1.05 | 207 | IFG112 |
| 2" | 51 | 2" | 47 | 45 | 25.5 | 24 | 88 | 102 | 42.9 | 77.8 | 13.5 | M12X45 | 1.17 | 207 | IFG002 |
| 2½" | 64 | 2½" | 63 | 50 | 26 | 28 | 101 | 115 | 50.8 | 88.9 | 13.5 | M12X45 | 1.59 | 172 | IFG212 |
| 3" | 76 | 3" | 70 | 50 | 27.5 | 28 | 124 | 137 | 61.9 | 106.4 | 17 | M16X50 | 2.28 | 138 | IFG003 |
| 4" | 102 | 4" | 99 | 48 | 27 | 34 | 146 | 162 | 77.8 | 130.2 | 17.5 | M16X50 | 2.78 | 34 | IFG004 |
| 6000 PSI High Pressure Series (According to ISO 6162-2) | | | | | | | | | | | | | | | |
| ½" | 13 | ½" | 13 | 36 | 16.5 | 19 | 47 | 57 | 18.2 | 40.5 | 8.7 | M8X30 | 0.29 | 420 | IFG012-6 |
| ¾" | 19 | ¾" | 18 | 36 | 20 | 20 | 54 | 72 | 23.8 | 50.8 | 10.5 | M10X35 | 0.5 | 420 | IFG034-6 |
| 1" | 25 | 1" | 22 | 44 | 24 | 22 | 68 | 82 | 27.8 | 57.2 | 13 | M12X45 | 0.76 | 420 | IFG001-6 |
| 1¼" | 32 | 1¼" | 32 | 44 | 27.5 | 22 | 79 | 95 | 31.8 | 66.6 | 15 | M14X45 | 1.2 | 420 | IFG114-6 |
| 1½" | 38 | 1½" | 38 | 51 | 31 | 24 | 88 | 108 | 36.5 | 79.3 | 17 | M16X55 | 1.65 | 420 | IFG112-6 |
| 2" | 51 | 2" | 51 | 70 | 37 | 35 | 118 | 137 | 44.5 | 96.8 | 21 | M20X70 | 2.45 | 420 | IFg002-6 |
| 2½" | 63 | 2½" | 63 | 80 | 45 | 32 | 150 | 166 | 58.7 | 123.8 | 25 | M24X90 | 7.9 | 420 | IFG212-6 |
| 3" | 73 | 3" | 73 | 90 | 55 | 40 | 178 | 208 | 71.4 | 152.4 | 32 | M30X110 | 14.5 | 420 | IFG003-6 |

| Material | Surface Protection | Tufit Part No. Example |
|---|---|---|
| Carbon Steel | Trivalent Cr(VI) - free Zinc Plated Bright Passivated | IFG012 |
| AISI-304 | Natural Finish | IFG012S4 |
| AISI-316 | Natural Finish | IFG012S6 |

# INTEGRATED FBSP WITH FLAT FACE (ISO 6162)

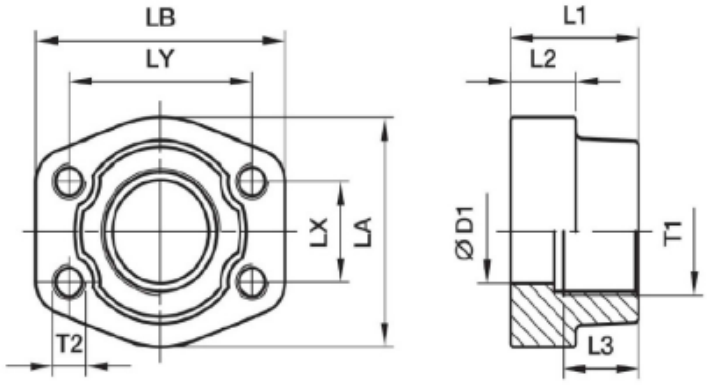

| 3000 PSI Standard Pressure Series (According to ISO 6162-1) | | | | | | | | | | | | | | | |
|---|---|---|---|---|---|---|---|---|---|---|---|---|---|---|---|
| SAE (IN) | ISO (DN) | T1 | D1 | L1 | L2 | L3 | LA | LB | LX | LY | T2 | T2 BOLT | WEIGHT | PN (bar) | TUFIT PART NO. |
| ½" | 13 | ½" | 13 | 36 | 16 | 18 | 47 | 57 | 17.5 | 38.1 | M8 | M8X30 | 0.25 | 345 | IFMG012 |
| ¾" | 19 | ¾" | 19 | 36 | 18 | 18 | 50 | 67 | 22.3 | 47.6 | M10 | M10X35 | 0.37 | 345 | IFMG034 |
| 1" | 25 | 1" | 25 | 38 | 18 | 18 | 54 | 72 | 26.2 | 52.4 | M10 | M10X35 | 0.45 | 345 | IFMG001 |
| 1¼" | 32 | 1¼" | 31 | 41 | 21 | 20 | 68 | 82 | 30.2 | 58.7 | M10 | M10X40 | 0.66 | 276 | IFMG114 |
| 1½" | 38 | 1½" | 38 | 44 | 25 | 22 | 79 | 96 | 35.7 | 69.9 | M12 | M12X45 | 1.05 | 207 | IFMG112 |
| 2" | 51 | 2" | 47 | 45 | 25.5 | 24 | 88 | 102 | 42.9 | 77.8 | M12 | M12X45 | 1.17 | 207 | IFMG002 |
| 2½" | 64 | 2½" | 63 | 50 | 26 | 28 | 101 | 115 | 50.8 | 88.9 | M12 | M12X45 | 1.59 | 172 | IFMG212 |
| 3" | 76 | 3" | 70 | 50 | 27.5 | 28 | 124 | 137 | 61.9 | 106.4 | M16 | M16X50 | 2.28 | 138 | IFMG003 |
| 4" | 102 | 4" | 99 | 48 | 27 | 34 | 146 | 162 | 77.8 | 130.2 | M16 | M16X50 | 2.78 | 34 | IFMG004 |
| 6000 PSI High Pressure Series (According to ISO 6162-2) | | | | | | | | | | | | | | | |
| ½" | 13 | ½" | 13 | 36 | 16.5 | 19 | 47 | 57 | 18.2 | 40.5 | M8 | M8X30 | 0.29 | 420 | IFMG012-6 |
| ¾" | 19 | ¾" | 18 | 36 | 20 | 20 | 54 | 72 | 23.8 | 50.8 | M10 | M10X35 | 0.5 | 420 | IFMG034-6 |
| 1" | 25 | 1" | 22 | 44 | 24 | 22 | 68 | 82 | 27.8 | 57.2 | M12 | M12X45 | 0.76 | 420 | IFMG034-6 |
| 1¼" | 32 | 1¼" | 32 | 44 | 27.5 | 22 | 79 | 95 | 31.8 | 66.6 | M14 | M14X45 | 1.2 | 420 | IFMG114-6 |
| 1½" | 38 | 1½" | 38 | 51 | 31 | 24 | 88 | 108 | 36.5 | 79.3 | M16 | M16X55 | 1.65 | 420 | IFMG112-6 |
| 2" | 51 | 2" | 51 | 70 | 37 | 35 | 118 | 137 | 44.5 | 96.8 | M20 | M20X70 | 2.45 | 420 | IFMG002-6 |
| 2½" | 63 | 2½" | 63 | 80 | 45 | 32 | 150 | 166 | 58.7 | 123.8 | M24 | M24X90 | 7.9 | 420 | IFMG212-6 |
| 3" | 73 | 3" | 73 | 90 | 55 | 40 | 178 | 208 | 71.4 | 152.4 | M30 | M30X110 | 14.5 | 420 | IFMG003-6 |

| Material | Surface Protection | Tufit Part No. Example |
|---|---|---|
| Carbon Steel | Trivalent Cr(VI) - free Zinc Plated Bright Passivated | IFMG012 |
| AISI-304 | Natural Finish | IFMG012S4 |
| AISI-316 | Natural Finish | IFMG012S6 |

# TUFIT INTEGRATED BLIND WITH ORING (ISO 6162)

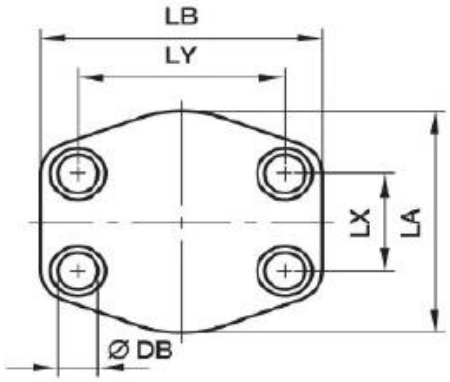


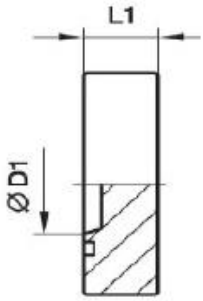

| 3000 PSI Standard Pressure Series (According to ISO 6162-1) | | | | | | | | | | | |
|---|---|---|---|---|---|---|---|---|---|---|---|
| SAE (IN) | ISO (DN) | L1 | LA | LB | LX | LY | Ø DB | BOLT | WEIGHT | PN (bar) | TUFIT PART NO. |
| ½" | 13 | 16 | 47 | 57 | 17.5 | 38.1 | 8.8 | M8X30 | 0.3 | 345 | BFO012 |
| ¾" | 19 | 18 | 50 | 67 | 22.3 | 47.6 | 10.5 | M10X35 | 0.37 | 345 | BFO034 |
| 1" | 25 | 19 | 54 | 72 | 26.2 | 52.4 | 10.5 | M10X35 | 0.54 | 345 | BFO001 |
| 1¼" | 32 | 18 | 68 | 82 | 30.2 | 58.7 | 10.5 | M10X40 | 0.9 | 276 | BFO114 |
| 1½" | 38 | 20 | 79 | 96 | 35.7 | 69.9 | 13.5 | M12X45 | 1.03 | 207 | BFO112 |
| 2" | 51 | 20 | 88 | 102 | 42.9 | 77.8 | 13.5 | M12X45 | 1.3 | 207 | BFO002 |
| 2½" | 64 | 20 | 101 | 115 | 50.8 | 88.9 | 13.5 | M12X45 | 1.45 | 172 | BFO002 |
| 3" | 76 | 24 | 127 | 137 | 61.9 | 106.4 | 17 | M16X50 | 2.72 | 138 | BFO003 |
| 4" | 102 | 27 | 146 | 162 | 77.8 | 130.2 | 17 | M16x50 | 3.1 | 34 | BFO04 |
| 6000 PSI High Pressure Series (According to ISO 6162-2) | | | | | | | | | | | |
| ½" | 13 | 16 | 47 | 57 | 18.2 | 40.5 | 8.8 | M8X30 | 0.3 | 420 | BFO012-6 |
| ¾" | 19 | 19 | 54 | 72 | 23.8 | 50.8 | 10.5 | M10X35 | 0.44 | 420 | BFO034-6 |
| 1" | 25 | 24 | 68 | 82 | 27.8 | 57.2 | 13 | M12X45 | 0.73 | 420 | BFO01-6 |
| 1¼" | 32 | 27 | 79 | 95 | 31.8 | 66.6 | 15 | M14X45 | 0.85 | 420 | BFO114-6 |
| 1½" | 38 | 30 | 88 | 108 | 36.5 | 79.3 | 17 | M16X55 | 1.61 | 420 | BFO112-6 |
| 2" | 51 | 36 | 118 | 137 | 44.5 | 96.8 | 21 | M20X70 | 3.31 | 420 | BFO002-6 |
| 2½" | 64 | 45 | 150 | 166 | 58.7 | 123.8 | 25 | M24X90 | 4.5 | 420 | BFO212-6 |
| 3" | 76 | 55 | 178 | 208 | 71.4 | 152.4 | 32 | M30X110 | 5.3 | 420 | BFO003-6 |

| Material | Surface Protection | Tufit Part No. Example |
|---|---|---|
| Carbon Steel | Trivalent Cr(VI) - free Zinc Plated Bright Passivated | BFO012 |
| AISI-304 | Natural Finish | BFO012S4 |
| AISI-316 | Natural Finish | BFO012S6 |

# TUFIT INTEGRATED BLIND WITH FLAT FACE (ISO 6162)

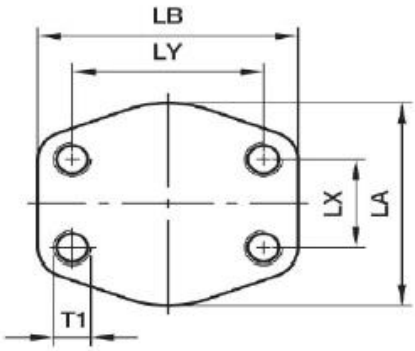


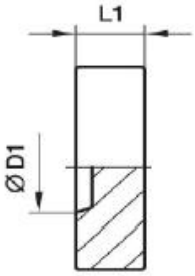

| 3000 PSI Standard Pressure Series (According to ISO 6162-1) | | | | | | | | | | | |
|---|---|---|---|---|---|---|---|---|---|---|---|
| SAE (IN) | ISO (DN) | L1 | LA | LB | LX | LY | T1 | BOLT | WEIGHT | PN (bar) | TUFIT PART NO. |
| ½" | 13 | 16 | 47 | 57 | 17.5 | 38.1 | M8 | M8X30 | 0.3 | 345 | BFF012 |
| ¾" | 19 | 18 | 50 | 67 | 22.3 | 47.6 | M10 | M10X35 | 0.37 | 345 | BFF034 |
| 1" | 25 | 19 | 54 | 72 | 26.2 | 52.4 | M10 | M10X35 | 0.54 | 345 | BFF001 |
| 1¼" | 32 | 18 | 68 | 82 | 30.2 | 58.7 | M10 | M10X40 | 0.9 | 276 | BFF114 |
| 1½" | 38 | 20 | 79 | 96 | 35.7 | 69.9 | M12 | M12X45 | 1.03 | 207 | BFF112 |
| 2" | 51 | 20 | 88 | 102 | 42.9 | 77.8 | M12 | M12X45 | 1.3 | 207 | BFF002 |
| 2½" | 64 | 20 | 101 | 115 | 50.8 | 88.9 | M12 | M12X45 | 1.45 | 172 | BFF212 |
| 3" | 76 | 24 | 127 | 137 | 61.9 | 106.4 | M16 | M16X50 | 2.72 | 138 | BFF003 |
| 4" | 102 | 27 | 146 | 162 | 77.8 | 130.2 | M16 | M16X50 | 3.1 | 34 | BFF004 |
| 6000 PSI High Pressure Series (According to ISO 6162-2) | | | | | | | | | | | |
| ½" | 13 | 16 | 47 | 57 | 18.2 | 40.5 | M8 | M8X30 | 0.3 | 420 | BFF012-6 |
| ¾" | 19 | 19 | 54 | 72 | 23.8 | 50.8 | M10 | M10X35 | 0.44 | 420 | BFF034-6 |
| 1" | 25 | 24 | 68 | 82 | 27.8 | 57.2 | M12 | M12X45 | 0.73 | 420 | BFF001-6 |
| 1¼" | 32 | 27 | 79 | 95 | 31.8 | 66.6 | M12 | M14X45 | 0.85 | 420 | BFF114-6 |
| 1½" | 38 | 30 | 88 | 108 | 36.5 | 79.3 | M16 | M16X55 | 1.61 | 420 | BFF112-6 |
| 2" | 51 | 36 | 118 | 137 | 44.5 | 96.8 | M20 | M20X70 | 3.31 | 420 | BFF002-6 |
| 2½" | 64 | 45 | 150 | 166 | 58.7 | 123.8 | M24 | M24X90 | 4.5 | 420 | BFF212-6 |
| 3" | 76 | 55 | 178 | 208 | 71.4 | 152.4 | M30 | M30X110 | 5.3 | 420 | BFF003-6 |

| Material | Surface Protection | Tufit Part No. Example |
|---|---|---|
| Carbon Steel | Trivalent Cr(VI) - free Zinc Plated Bright Passivated | BFF012 |
| AISI-304 | Natural Finish | BFF012S4 |
| AISI-316 | Natural Finish | BFF012S6 |